PRODUCT CATALOGUE 2027

ESD Magazine Racks

Plastic and metal magazine racks with gear or screw width adjustment, 120 °C versions, special sizes and ESD trolleys.







DISTRIBUTOR FOR EUROPE

InterElectronic

3-YEAR WARRANTY

www.inte-on.com

INTRODUCTION

Safe PCB storage and transport on the line

INTEON ESD magazine racks store and carry PCBs safely between the stages of SMT and THT production. They are compatible with automatic magazine loaders and unloaders, and the adjustable width lets one rack serve several board sizes.

Warranty

3 years

3-year warranty on INTEON ESD magazine racks and trolleys.

ESD safe

Surface resistance 10^4 to 10^8 Ω.

Heat resistant

Standard racks up to 100 °C, G versions up to 120 °C, 301B1H up to 200 °C.

Support in Europe

Sales, delivery and service in Europe through InterElectronic.

MAGAZINE DIMENSIONS

How to read the specifications

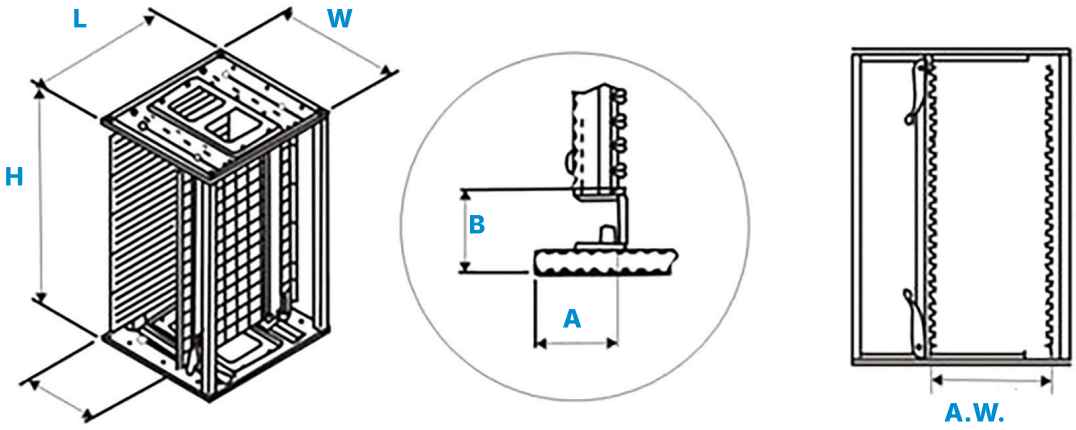

L × W × H

Contour size of the rack.

PCB width

Adjustable width range (A.W.).

A, B

Reference position of the board edge to the frame.

Slot w / d

Width and depth of the guide slot.

G version

High temperature version, up to 120 °C.

H version

301B1H, up to 200 °C.

Article number

IE-7711 + model, e.g. IE-7711301B1G.

CONTENTS

Choose your rack

	Family	Size (L × W)	Width adjustment	Page
Plastic top and base				
	**301A**	355 × 315 mm	Screw	4
	**301B plastic**	355 × 320 mm	Gear, screw, chain	5
Metal top and base				
	**301B metal**	355 × 320 mm	Gear (6), screw (7)	6
	**301C**	460 × 400 mm	Gear, screw	8
	**301D**	535 × 460 mm	Gear, screw	9
	**301E**	535 × 530 mm	Gear, screw	9
	**301F**	630 × 530 mm	Screw	10
Special versions				
	**Special plastic**	Pull plate, long, fixed width	Screw, gear, fixed	11
	**Special metal**	Wide, double length, small	Gear, slide-in, belt	12
Option				
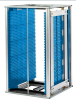	**Coloured ESD walls**	any colour, minimum order quantity	all racks	13
ESD trolleys				
	201, 202, 203, 204, 206, 101	PCB, shelf and magazine trolleys		14

PLASTIC TOP AND BASE

301A

355 × 315 mm
screw adjustment, three heights



301A



301A-2



301A-1

Model	Width adjustment	Max. temp.	L × W × H mm	PCB width mm	PCB slots	Pitch mm	Slot w / d mm	Ref. A / B mm	Weight kg	Load kg	Board stopper
SCREW width set with screws											
301A	Screw	100 °C	355 × 315 × 580	90–250	50	10	7 / 3.5	34 / 35.5	5.8	20	Spring
301A-2	Screw	on request	355 × 315 × 365	85–250	30	10	7 / 3.5	34 / 35.5	3.55	15	Spring
301A-1	Screw	100 °C	355 × 315 × 315	85–250	25	10	7 / 3.5	34 / 35.5	3.22	15	Spring

301A-2 and 301A-1 are lower versions with 30 and 25 slots. Max. temperature "on request": please ask for the available temperature versions.



ESD side walls in any colour

Plastic side walls are also available as ESD-safe coloured walls in any colour. Minimum order quantity applies. See page 13.

PLASTIC TOP AND BASE

301B plastic

355 × 320 mm
gear, screw and chain adjustment



301B2



301B4



301B2-9A



301B2-9B



301B2-1



301R



301R-2



301S

Model	Width adjustment	Max. temp.	L × W × H mm	PCB width mm	PCB slots	Pitch mm	Slot w / d mm	Ref. A / B mm	Weight kg	Load kg	Board stopper
GEAR width set with a crank, "quick" with fast adjustment											
301B2	Gear	100 °C	355 × 320 × 563	50–250	50	10	5 / 3.5	34 / 34	4.18	20	Spring
301B2G	Gear	**120 °C**	355 × 320 × 563	50–250	50	10	5 / 3.5	34 / 34	4.18	20	Spring
301B4	Gear	100 °C	355 × 320 × 563	50–250	50	10	7 / 3	34 / 33	5.52	20	Spring
301B4G	Gear	**120 °C**	355 × 320 × 563	50–250	50	10	7 / 3	34 / 33	5.52	20	Spring
301B2-9A	Gear, quick	on request	355 × 320 × 563	50–250	50	10	5 / 3.5	34 / 34	–	20	Spring
301B2-9B	Gear, quick	on request	355 × 320 × 563	50–250	50	10	5 / 3.5	34 / 34	4.1	20	2 built-in
SCREW width set with screws											
301B2-1	Screw	on request	355 × 320 × 563	50–250	50	10	5 / 3.5	34 / 34	4.12	20	Spring
301R	Screw	on request	355 × 320 × 565	50–254	50	10	7 / 4	34 / 34	7.12	20	Metal
301R-2	Screw	on request	355 × 320 × 568	50–240	25	20	6 / 4	33 / 33.5	6.72	20	Pull plate
CHAIN											
301S	Chain	100 °C	355 × 320 × 560	50–240	50	10	4.5 / 3	34 / 34	5.63	15	Spring

301B4: one-piece side panel, 7 mm slots. 301R-2: 20 mm pitch. Max. temperature "on request": please ask for the available temperature versions.



ESD side walls in any colour

Plastic side walls are also available as ESD-safe coloured walls in any colour. Minimum order quantity applies. See page 13.

METAL TOP AND BASE

301B metal, gear

355 × 320 mm
our most popular racks



301B1



301B3



301Q



302B



301B1-9



301B1-2



301B1-4



301B1-1

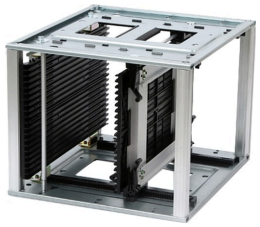

301B1-6

Model	Width adjustment	Max. temp.	L × W × H mm	PCB width mm	PCB slots	Pitch mm	Slot w / d mm	Ref. A / B mm	Weight kg	Load kg	Board stopper
GEAR, HEIGHT 563 MM 50 slots, 301B1-4 with 25 slots											
301B1 BESTSELLER	Gear	100 °C	355 × 320 × 563	35–250	50	10	5 / 3.5	34 / 34	5.27	15	Spring
301B1G BESTSELLER	Gear	**120 °C**	355 × 320 × 563	35–250	50	10	5 / 3.5	34 / 34	5.27	15	Spring
301B3	Gear	100 °C	355 × 320 × 563	35–250	50	10	7 / 3	34 / 33	6.94	20	Spring
301B3G	Gear	**120 °C**	355 × 320 × 563	35–250	50	10	7 / 3	34 / 33	6.94	20	Spring
301Q	Gear, quick	100 °C	355 × 320 × 563	50–250	50	10	5 / 3.5	34 / 34	5.53	20	Spring
301QG	Gear, quick	**120 °C**	355 × 320 × 563	50–250	50	10	5 / 3.5	34 / 34	5.53	20	Spring
302B	Gear, quick	up to 120 °C	355 × 320 × 563	50–250	50	10	5 / 3.5	34 / 34	6.2	20	2 built-in
301B1-9	Gear	on request	355 × 320 × 563	35–250	50	10	5 / 3.5	34 / 34	5.27	15	Spring
301B1-2	Gear	on request	355 × 320 × 563	40–256	50	10	5 / 3.5	31 / 34	5.54	20	Spring
301B1-4	Gear	on request	355 × 320 × 563	35–250	25	20	7 / 3.5	34 / 34	5.44	20	Spring
GEAR, LOWER HEIGHT 20 and 30 slots											
301B1-1	Gear	100 °C	355 × 320 × 363	35–250	30	10	5 / 3.5	34 / 34	4.52	20	Spring
301B1-1G	Gear	**120 °C**	355 × 320 × 363	35–250	30	10	5 / 3.5	34 / 34	4.52	20	Spring
301B1-6	Gear	on request	355 × 320 × 263	35–250	20	10	5 / 3.5	34 / 34	3.99	20	Spring

301B3: one-piece side panel, 7 mm slots. 301B1-4: 20 mm pitch for boards with tall components. Max. temperature “on request”: please ask for the available temperature versions.



ESD side walls in any colour

Plastic side walls are also available as ESD-safe coloured walls in any colour. Minimum order quantity applies. See page 13.

METAL TOP AND BASE

301B metal, screw

355 × 320 mm
screw adjustment, including the 200 °C rack



301B1-10



301B1H

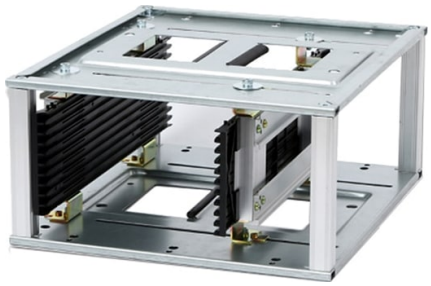

301B1-7

Model	Width adjustment	Max. temp.	L × W × H mm	PCB width mm	PCB slots	Pitch mm	Slot w / d mm	Ref. A / B mm	Weight kg	Load kg	Board stopper
SCREW width set with screws											
301B1-10	Screw	on request	355 × 320 × 563	35–250	50	10	5 / 3.5	34 / 34	5.31	20	Spring
301B1H	Screw	**200 °C**	355 × 320 × 563	35–250	50	10	5 / 3	34 / 34	5.88	20	Spring
301B1-7	Screw	on request	355 × 320 × 163	35–250	10	10	5 / 3.5	34 / 34	3.4	20	Spring

301B1H: for baking and curing up to 200 °C. 301B1-7: 10 slots, height 163 mm. Max. temperature “on request”: please ask for the available temperature versions.



ESD side walls in any colour

Plastic side walls are also available as ESD-safe coloured walls in any colour. Minimum order quantity applies. See page 13.

METAL TOP AND BASE

301C

460 × 400 mm
gear and screw adjustment



301C



301C-6



302C



301C-2

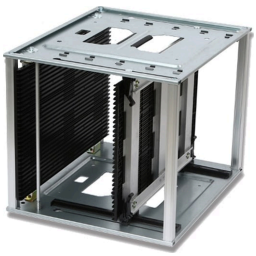

301C-4



301C-1



301C-3

Model	Width adjustment	Max. temp.	L × W × H mm	PCB width mm	PCB slots	Pitch mm	Slot w / d mm	Ref. A / B mm	Weight kg	Load kg	Board stopper
GEAR width set with a crank, "quick" with fast adjustment											
301C	Gear	100 °C	460 × 400 × 563	70–330	50	10	5 / 3.5	34 / 34	7.76	20	Spring
301CG	Gear	**120 °C**	460 × 400 × 563	70–330	50	10	5 / 3.5	34 / 34	7.76	20	Spring
301C-6	Gear, quick	on request	460 × 400 × 563	70–330	50	10	5 / 3.5	34 / 34	7.76	20	Spring
302C	Gear, quick	on request	460 × 400 × 563	80–330	50	10	5 / 3.5	34 / 34	8.3	20	2 built-in
301C-2	Gear	on request	460 × 400 × 569	70–330	50	10	5 / 3.5	34 / 37	7.81	20	Spring
301C-4	Gear	on request	460 × 400 × 363	70–330	30	10	5 / 3.5	34 / 34	6.43	20	Spring
301C-1	Gear	on request	460 × 320 × 563	40–250	50	10	5 / 3.5	34 / 34	7.22	20	Spring
SCREW width set with screws											
301C-3	Screw	on request	460 × 400 × 563	35–330	50	10	5 / 3.5	34 / 34	7.49	20	Spring

301C-1: narrow version, 460 × 320 mm. 301C-4: 30 slots. Max. temperature "on request": please ask for the available temperature versions.



ESD side walls in any colour

Plastic side walls are also available as ESD-safe coloured walls in any colour. Minimum order quantity applies. See page 13.

METAL TOP AND BASE

301D

535 × 460 mm
gear and screw adjustment



301D



301D-1

Model	Width adjustment	Max. temp.	L × W × H mm	PCB width mm	PCB slots	Pitch mm	Slot w / d mm	Ref. A / B mm	Weight kg	Load kg	Board stopper
GEAR											
301D	Gear	100 °C	535 × 460 × 569	45–385	50	10	5 / 3.5	34 / 37	9.57	25	Spring
301DG	Gear	**120 °C**	535 × 460 × 569	45–385	50	10	5 / 3.5	34 / 37	9.57	25	Spring
SCREW											
301D-1	Screw	on request	535 × 460 × 569	40–390	50	10	5 / 3.5	34 / 37	9.35	25	Spring

METAL TOP AND BASE

301E

535 × 530 mm
gear and screw adjustment



301E



301E-3



301E-1

Model	Width adjustment	Max. temp.	L × W × H mm	PCB width mm	PCB slots	Pitch mm	Slot w / d mm	Ref. A / B mm	Weight kg	Load kg	Board stopper
GEAR											
301E	Gear	100 °C	535 × 530 × 569	45–455	50	10	5 / 3.5	34 / 37	10.28	25	Spring
301EG	Gear	**120 °C**	535 × 530 × 569	45–455	50	10	5 / 3.5	34 / 37	10.28	25	Spring
301E-3	Gear	on request	535 × 530 × 563	45–455	50	10	5 / 3.5	34 / 34	10.28	25	Spring
SCREW											
301E-1	Screw	on request	535 × 530 × 569	45–460	50	10	5 / 3.5	34 / 37	10.07	25	Spring

Max. temperature “on request”: please ask for the available temperature versions.



ESD side walls in any colour

Plastic side walls are also available as ESD-safe coloured walls in any colour. Minimum order quantity applies. See page 13.

METAL TOP AND BASE

301F

630 × 530 mm
our largest rack, screw adjustment



301F

Model	Width adjustment	Max. temp.	L × W × H mm	PCB width mm	PCB slots	Pitch mm	Slot w / d mm	Ref. A / B mm	Weight kg	Load kg	Board stopper
SCREW width set with screws											
301F	Screw	100 °C	630 × 530 × 569	30–460	49	10	6.5 / 4	38 / 37	12.48	25	Spring
301FG	Screw	**120 °C**	630 × 530 × 569	30–460	49	10	6.5 / 4	38 / 37	12.48	25	Spring



ESD side walls in any colour

Plastic side walls are also available as ESD-safe coloured walls in any colour. Minimum order quantity applies. See page 13.

SPECIAL VERSIONS

Special plastic racks

Pull plate, long and fixed width
for special boards and lines



301N



301N-2



301B2-2



801



805

Model	Width adjustment	Max. temp.	L × W × H mm	PCB width mm	PCB slots	Pitch mm	Slot w / d mm	Ref. A / B mm	Weight kg	Load kg	Board stopper
SCREW, PULL PLATE boards secured with a pull plate											
301N	Screw	120 °C	400 × 320 × 568	50–250	50	10	7 / 3	34 / 34.5	7.72	20	Pull plate
301N-2	Screw	on request	470 × 320 × 565	50–240	50	10	7 / 4	33 / 33.5	–	20	Pull plate
GEAR, 400 MM LONG											
301B2-2	Gear	on request	400 × 320 × 573	50–250	50	10	5 / 3.5	34 / 39	5.42	20	Spring
FIXED WIDTH not adjustable											
801	Fixed	on request	330 × 192 × 505	138	25	16	13 / 2.8	33.5 / 42	5	15	Pull plate
805	Fixed	on request	355 × 155 × 278	117	24	10	5 / 3	19 / 27.5	2.51	15	Spring

Max. temperature “on request”: please ask for the available temperature versions.



ESD side walls in any colour

Plastic side walls are also available as ESD-safe coloured walls in any colour. Minimum order quantity applies. See page 13.

SPECIAL VERSIONS

Special metal racks

Wide, double length, small
gear, slide-in and belt adjustment



301B1-5



301B1-8



301B2-5



301K



301B5-4



301B5-6

Model	Width adjustment	Max. temp.	L × W × H mm	PCB width mm	PCB slots	Pitch mm	Slot w / d mm	Ref. A / B mm	Weight kg	Load kg	Board stopper
GEAR											
301B1-5	Gear	on request	355 × 500 × 563	90–430	50	10	5 / 3.5	34 / 34	6.94	20	Spring
301B1-8	Gear	on request	710 × 320 × 563	35–250	50	10	5 / 3.5	34 / 34	11.54	30	Spring
301B2-5	Gear	on request	400 × 320 × 563	35–250	50	10	5 / 3.5	34 / 34	6.54	20	Spring
301K	Gear, quick	on request	300 × 270 × 563	50–200	50	10	5 / 3	34 / 34	–	15	Spring
SLIDE-IN AND BELT	aluminium alloy top and base										
301B5-4	Slide-in	up to 150 °C	320 × 283 × 555	50–210	50	10	5 / 3	35 / 26	6.38	20	Spring
301B5-6	Belt, screw	up to 150 °C	400 × 380 × 563	20–310	50	10	5 / 3	34 / 34	9.39	20	Spring

301B1-5: for boards up to 430 mm wide. 301B1-8: double length, 710 mm. Max. temperature “on request”: please ask for the available temperature versions.



ESD side walls in any colour

Plastic side walls are also available as ESD-safe coloured walls in any colour. Minimum order quantity applies. See page 13.

OPTION

ESD side walls in any colour

The plastic side walls of INTEON magazine racks are also available as ESD-safe coloured walls. Choose your company colour, or use colours to separate lines, customers or process steps at a glance.



Illustration: 301B1 with blue side walls

Any colour

Black is standard, every other colour is made to order.

ESD safe

Coloured walls are also available in ESD-safe version.

For every rack

Plastic and metal racks, gear and screw adjustment.

Minimum order quantity

A minimum order quantity applies. Please ask for a quotation with the colour and the quantity.



ESD TROLLEYS

Moving PCBs between processes



ARTICLE IE-7711201

201 ESD Trolley

PCB trolley with ten assembled side plates and double flashboard. 100 slots per row, holds 200 or 400 boards.

Size L × W × H
900 × 550 × 1300 mm or 1200 × 550 × 1300 mm

Slide plate
100 × 46 cm, ten pieces assembled

Flapper size
10 × 46 cm

Slot
width 5 mm, depth 4 mm, pitch 10 mm, 100 slots



ARTICLE IE-7711201-2

201-2 ESD Trolley

PCB trolley with four assembled side plates and double flashboard. 100 slots per row, holds 200 or 400 boards.

Size L × W × H
900 × 550 × 1380 mm or 1200 × 550 × 1380 mm

Slide plate
100 × 46 cm, four pieces assembled

Flapper size
24.8 × 46 cm

Slot
width 4.5 mm, depth 4.5 mm, pitch 10 mm, 100 slots



ARTICLE IE-7711202

202 ESD Trolley

Wide trolley with double flashboard side plates. Each side plate has 60 slots for 120 boards, inserting depth 225 mm.

Size L × W × H
950 × 675 × 1300 mm or 1200 × 675 × 1300 mm

Inserting depth
225 mm

Slot
width 5 mm, depth 5 mm, pitch 19 mm, 120 slots



ARTICLE IE-7711203

203 ESD Trolley

Narrow trolley with double flashboard side plates. 100 slots per row, holds 200 or 400 boards.

Size L × W × H
950 × 410 × 1300 mm

Slot
width 5 mm, depth 5 mm, pitch 10 mm, 100 slots

Surface resistance Conductive type < 1×10^6 Ω Dissipative type 1×10^6 – 1×10^{11} Ω

ESD TROLLEYS

Shelf and magazine trolleys



ARTICLE IE-7711204

204 ESD Trolley

Multi-level shelf trolley with double flashboard side plates, 90 slots on each level.

Size L × W × H
970 × 470 × 1550 mm

Slot
width 12 mm at 24 mm pitch, or 3 mm at 23 mm pitch

Capacity
90 slots per level



ARTICLE IE-7711206

206 ESD Trolley

Shelf trolley with angled board holders on several levels.

Size L × W × H
850 × 600 × 1400 mm

Slot
width 2.7 mm, depth 5 mm, pitch 10 mm, 20 slots

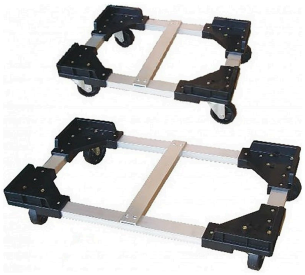

ARTICLE IE-7711101

101 ESD Magazine Trolley

Low base trolley with castors for moving magazine racks. Any size can be ordered.

Height
140 mm

Sizes
any specification can be ordered

Surface resistance Conductive type < 1×10^6 Ω Dissipative type $1 \times 10^6 – 1 \times 10^{11}$ Ω

INTEON

www.inte-on.com

MANUFACTURER

INTEON Corporation Limited

RM A07, 1701-02 New Trend Centre
704 Prince Edward Road East
San Po Kong, KLN, Hong Kong
E-mail: **info@inte-on.com**

DISTRIBUTOR FOR EUROPE

InterElectronic Hungary Kft.

2461 Tárnok, Pacsirtamező 3 D/1
Károly Peics **+36 30 296 45 05**
David Peics **+36 30 217 1226**
E-mail: **info@interelectronic.com**

MR-1/2027